Honeywell

Infra-red flicker detector IRD 1020.1

Flame detection device for oil and gas flames

INTRODUCTION

The IRD 1020.1 detector is used to supervise gas or oil flames. This flame monitoring device should be connected to a Satronic oil burner control box. Monitoring is based on the infra-red flicker principle, in other words, the flickering infra-red light of the flame is detected. The steady radiation from, for example, the glowing refractory layer on the inside of the boiler, has no effect on the detector. The IRD 1020.1 replaces the IRD 1020 and 920.
When exchanging the IRD 1020, care must be taken that the corresponding IRD 1020.1 with the same imprint (blue or white) is used (see page 3 and 4).
When exchanging the IRD 920, care must be taken to wire the sensor correctly (see page 3), and the existing holder must be exchanged with the magnetic holder M93.
For replacement of the IRD 920 with IRD 1020.1 is the sensor cable also needed.

The infra-red flicker detector can be used with any one of the following control boxes:

IRD 1020.1	DKG 972
	DLG 974, 976
	DMG 970, 971, 972, 973
	TFI 812.2
	MMI 810, 811, 812, 815, 816, 962
	TMG 740-2, 740-3
	SGU 930, 930i
IRD 1020.1 D	DVI 980, 982
	MMG 810, 811
	FFW 930
	DKG 972
	DLG 974, 976
	DMG 970, 971, 972, 973
	TFI 812.2
	MMI 810, 811, 812, 815, 816, 962
	TMG 740-2, 740-3
	SGU 930, 930i

CONSTRUCTIONAL FEATURES

The infra-red sensor and the pre-amplifier are hermetically sealed in glass and along with the electronics form an integrated unit in the flame detector. Wiring is by way of a plug connection. The sensitivity control and two LED's for indication of the flame signal are situated on the rear of the flicker detector.

TECHNICAL DATA

Supply voltage	220 / 240 V (-15... +10%) 50 Hz (50 - 60 Hz)
or	110/120 V (-15... +10%) 50 - 60 Hz (±5%)
Nominal current input	approx. 4 mA
Power consumption	1 VA
Ambient temperature	-20° C to +60° C
Insulation standard	IP 41
Mounting attitude	any
Weight	40 g
Flame viewing attitude	side-on or end-on according to type
Spectral response	800 - 1100 nm
(with daylight filter)	maximum 950 nm
Frequency range	15 Hz.... 250 Hz (-12 dB)
Sensitivity adjustment range	approx. 1 : 20 (26 dB)
Switch-on delay (after connecting operating voltage)	< 3.5 sec.
Response time	< 0.1 sec.
Cut-out time	< 1 sec.
Approved ambient parameter	max. 95% at 30° C
- for operation	-20° C... +60° C
- for storage	-20° C... +80° C
Build-up of ice, penetration of water and condensing water are	inadmissible
Approvals according to European standards	EN 298, as well as all other relevant Directives and standards

EN1C-0118SZ20 R1005

TECHNICAL FEATURES

1. Flame detection

- Yellow- as well as blue-burning oil- and gas flames can be monitored.
- The flame detector is suitable for operation where the ambient temperature is within the range -20° to +60° C.
- The flickering detector IRD 1020.1 becomes active not before a minimum threshold-level of steady light is exceeded. That guarantees that neither electromagnetic- nor ignition-spark noise are affecting the IRD.
- Sensitivity is adjustable.
- LED 1 is a warning indicator for the pre-purge phase as well as normal operation. LED 2 indicates the actual status of the detector: On or off.
- During pre-purge, LED 1 indicates possible stray light, which may be produced either by a flickering or by a steady light source, before the detector switches on (LED 2).
- When the burner is operating normally, LED 1 acts as a warning indication of the flame signal current sensitivity being set too low - it begins to flicker or extinguishes before the detector switches off.
- The compact size makes it possible to mount the detector on any burner. For this reason the IRD mounting flange M93 has the same dimensions and fixing holes as the FZ flange M74. This magnetic flange provides the switch-off facility specified in the European standard. The IRD 1020.1 therefore only functions with the M93 flange.

2. Installation instructions

- The detector probe should be fitted so that it receives the light which pulsates most strongly. This can be achieved by positioning the detector as close as possible to the flame or by directing it at a particular zone of the flame (e.g. by using a sighting tube).
- No stray light must be allowed to fall on the detector (e.g. through cracks or from a sight glass). Pulsating stray light (e.g. from fluorescent lighting or light bulbs) could cause the system to switch to lockout. Due to the very high sensitivity of the detector, it should not be exposed directly or indirectly (reflections) to the ignition spark.
- The infra-red flicker detector should be fitted in such a way that the ambient temperature cannot under any circumstances rise above 60 °C. At higher temperatures, there is a risk of incorrect operation and the life expectancy of the unit could be reduced. In addition, care should be taken that the detector is not subjected to unusually harsh vibration and receives no hard knocks.
- It is necessary for the magnetic IRD M93 flange to be mounted on a flat surface to avoid any mechanical stress which could otherwise damage it.

COMMISSIONING AND MAINTENANCE

During commissioning and after servicing, the flame monitoring system should be checked for faultless operation as follows:

1. Check that the detector is connected properly. Wrong connections are a risk to safety, and could cause damage to the detector unit or burner system.
2. Adjust to maximum sensitivity and start the burner: If the LED indicator is lit after the start impulse, carefully adjust the sensitivity control until LED 1 extinguishes. No LED should light up during the pre-purge phase.
3. When the burner is operating normally, carefully turn back the sensitivity control until LED 1 begins to flicker. Increase the setting again by one or two increments until both LED's are lit. If LED 1 does not flicker even at position 1: Leave potentiometer at position 1-2. This adjustment should be carried out when the flame signal current is weakest (at a cold-start, shortly after flame establishment or after stabilisation).
4. The flame detection device requires no maintenance of any kind, and as it is classed as safety equipment, no attempt should be made to open the housing.
5. Because the nature of the flame can change in time due to the accumulation of dirt, the indicators on the detector should be checked periodically.

Please note:
Burner operating normally = both LED's on
Burner in pre-purge phase = both LED's off

For safety reasons the sensitivity must not be set higher than necessary.

Safety Checks:

1. Shut off the fuel supply when the burner is in the "run" position. The indicator LEDs should extinguish and the control box go to lockout.
2. Start the burner with the fuel supply shut off. The control box must go to lockout at the end of the safety time due to absence of flame.
3. Remove the detector from its mounting flange during a pause, fit onto it a second flange M93. Start the burner with straylight on the detector (e.g. by a cigarette-lighter, bulb or a neonlight. Daylight or a torch is not suitable). The control box must go to lockout due to stray light either immediately or at the end of the pre-purge, depending on the model.

Test switch-off facility:

1. Remove the detector durning the "run" position from its special M93 flange. The control box must go to lockout due to the activated switch-off facility.

Possible faults

1. **LED's light up during the pre-purge phase (control box switches to lockout):**
   a) Sensitivity set too high
   b) Stray light
   c) Ignition spark visible to detector (directly or reflection). Correct by preventing direct sight of ignition spark.
   d) Interference from ignition cable (lay cables some distance apart, or possibly screen the detector).

2. **No indication from LED's after establishment of flame:**
   a) Incorrect or faulty wiring
   b) Sensitivity set too low
   c) Detector positioned wrongly (receives no light)
   d) Detector or viewing window dirty
   e) Defective detector
   f) IRD flange M93 defective (cracks or other mechanical defects)
   g) wrong IRD flange, special magnetic IRD flange M93 is needed.

IRD 1020.1 TERMINALS

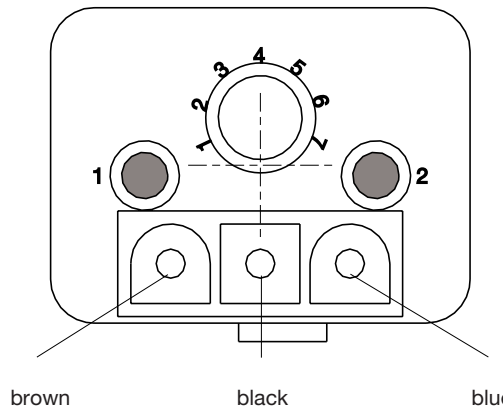

CONNECTION OF IRD 1020.1 TO SATRONIC BURNER CONTROL BOXES

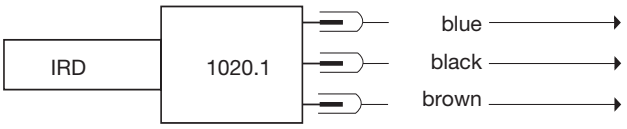

Control box type	TFI 812	DKG 97. DLG 97.	DMG 97.
Terminal no.	8	8	8
Terminal no.	1	1	2
Terminal no.	9	9	9

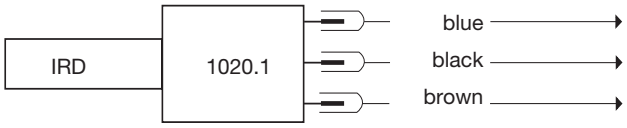

Control box type	MMI
Terminal no.	8
Terminal no.	2
Terminal no.	9

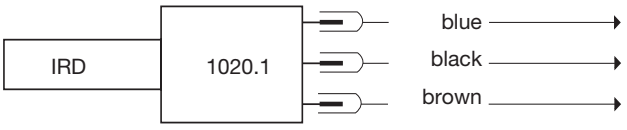

Control box type	TMG 740	SGU 930(i)
Terminal no.	8	N
Terminal no.	1	15
Terminal no.	20	1

SENSITIVITY –CHARACTERISTIC OF IRD 1020.1 (BLUE, WHITE)

IRD-Type	**Sensitivity**	**Characteristic**
blue	standard	For Gas- or dual fuel burner Immune to Ignition spark detection
white	increased	For Gas- or dual fuel burner for difficult to detect flame Immune to Ignition spark detection

HOLDER M93

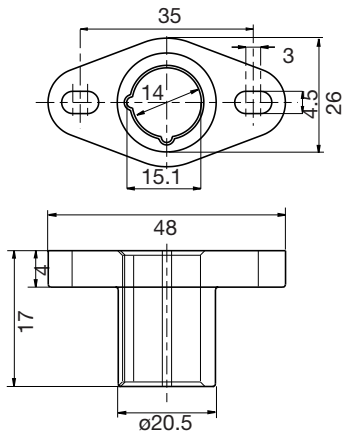

FLICKER DETECTOR IRD 1020.1

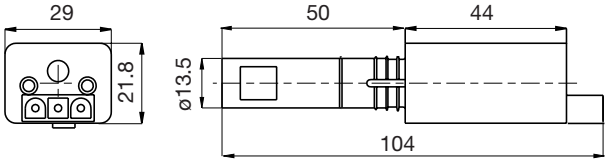

VARIANTS

		Item no.	
Light entrance from right	blue	16531	230 Volt
	white	1653104	230 Volt
End-on light entrance	blue	16532	230 Volt
	white	1653204	230 Volt
	blue	16572	115 Volt
	blue (1020.1 D version)	16552	230 Volt
Light entrance from left	blue	16533	230 Volt

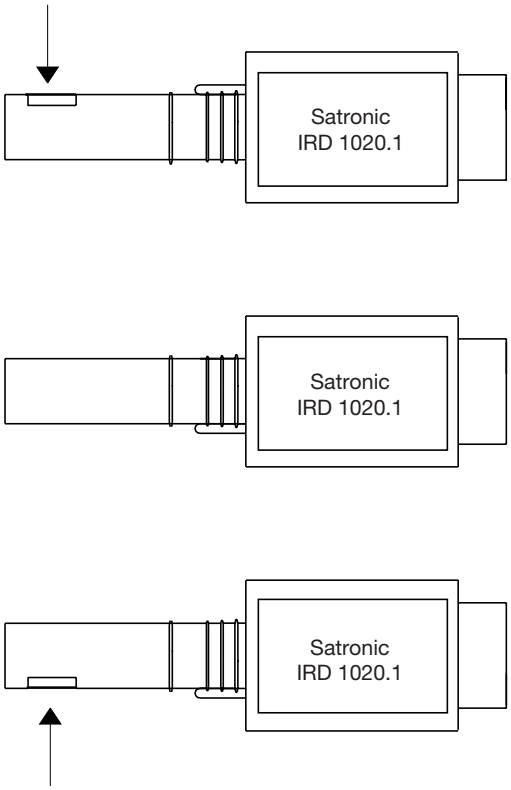

ORDERING INFORMATION

ITEM	DESIGNATION		ITEM NO.
Flame sensor	Flicker detector IRD 1020.1 side-on right **blue**	230V	16531
	Flicker detector IRD 1020.1 side-on right **white**	230V	1653104
optional	Flicker detector IRD 1020.1 end-on viewing **blue**	230V	16532
	Flicker detector IRD 1020.1 D end-on viewing **blue**	230V	16552
	Flicker detector IRD 1020.1 end-on viewing **white**	230V	1653204
	Flicker detector IRD 1020.1 end-on viewing **blue**	115V	16572
	Flicker detector IRD 1020.1 side-on left **blue**	230V	16533
Mounting flange	Flange M93	230V	59093
Sensor cable	Plug type, 3-wire, 0.6 m with tag wire ends		7236001

The above ordering information refers to the standard version.
Special versions are also included in our product range.

Specifications subject to change without notice.

Honeywell

Combustion Controls EMEA - Local Honeywell Sales Offices

France

Honeywell SA
Parc Technologique de St. Aubin
Bâtiment Mercury – BP87
91193 Gif-Sur-Yvette Cedex
FRANCE

Phone: (33) 1 60 19 80 00
Fax: (33) 1 60 19 81 81

internet: www.honeywell.fr

Spain

Honeywell S.A.
Josefa Valcárcel, 24
28027 Madrid
SPAIN

Phone: (34) 9 13136100
Fax: (34) 9 13 13 61 27

internet: www.honeywell.es

Eastern Europe

Honeywell s.r.o.
Mlynske Nivy 73
PO Box 75
82007 Bratislava 27
SLOVAKIA

Phone: (421) 2 58247 400
Fax: (421) 2 58247 415

e-mail: info.slovakia@honeywell.com

United Kingdom

Honeywell Control Systems Ltd
Honeywell House, Arlington Business Park
Bracknell
Berkshire, RG12 1EB
UNITED KINGDOM

Switchboard +44 (0)1344 656000
Information Centre Tel +44 (0)1344 656235
Information Centre Fax +44 (0)1344 656240

Email: Uk.infocentre@honeywell.com
internet: www.honeywelluk.com

Germany, Austria, Switzerland

Honeywell GmbH
Kaiserleistrasse 39
63067 Offenbach
DEUTSCHLAND

Phone: (49) 6 980640
Fax: (49) 69 81 86 20

internet: www.honeywell.de

Benelux

Honeywell B.V.
Laarderhoogtweg 18
1101 EA Amsterdam Z.O.
THE NETHERLANDS

Phone: (31) 2 05656911
Fax: (31) 2 05 65 66 00

internet: www.honeywell.nl

Italy

Honeywell S.r.l.
Via P. Gobetti, 2/B
20063 Cernusco sul Naviglio (MI)
ITALY

Phone: 39 02 92146 1
Fax: 39 02 92146 888

internet: http://www.honeywell.com/sites/it/